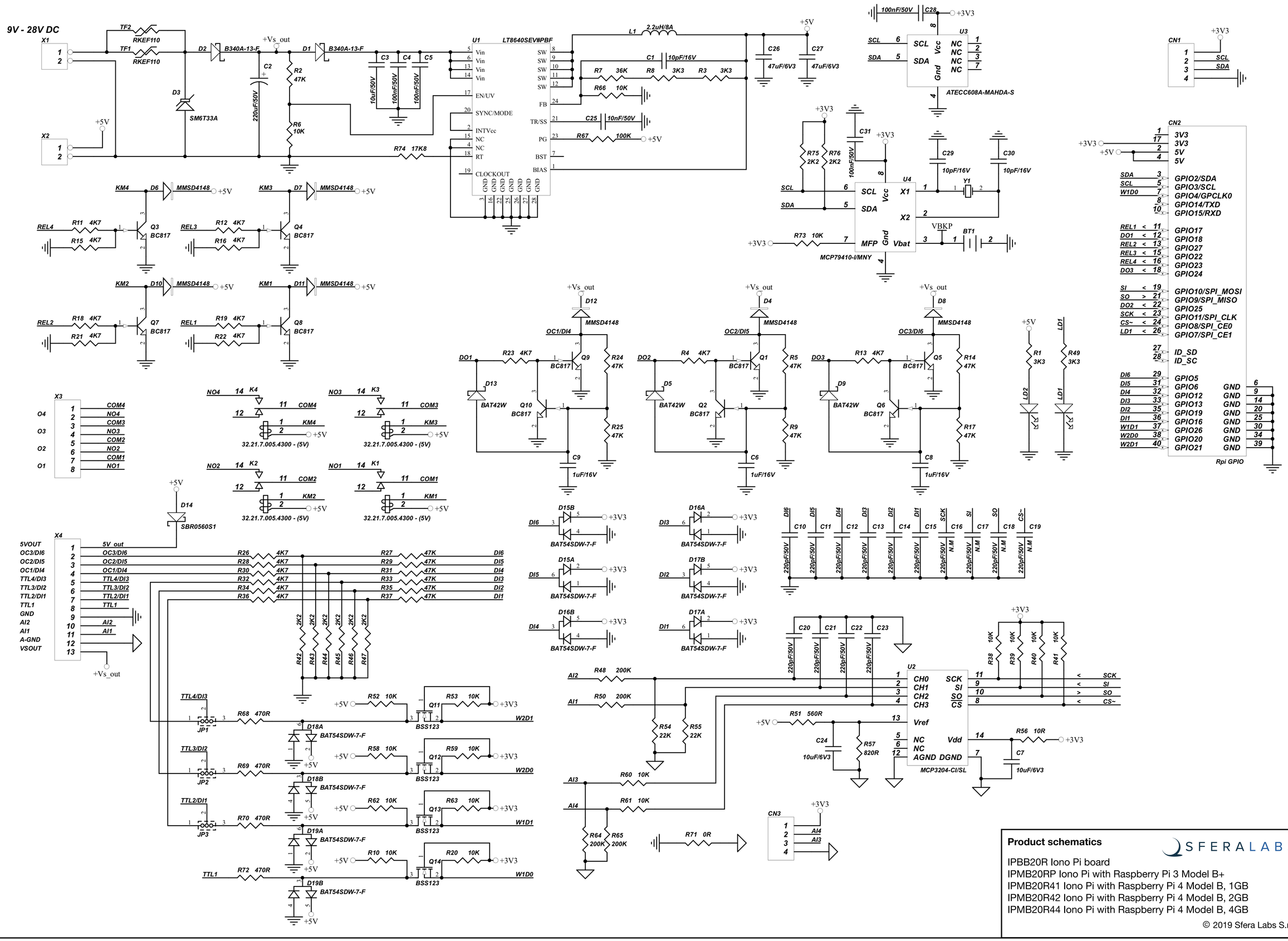

Product schematics

SFERALABS

IPBB20R Iono Pi board
IPMB20RP Iono Pi with Raspberry Pi 3 Model B+
IPMB20R41 Iono Pi with Raspberry Pi 4 Model B, 1GB
IPMB20R42 Iono Pi with Raspberry Pi 4 Model B, 2GB
IPMB20R44 Iono Pi with Raspberry Pi 4 Model B, 4GB

© 2019 Sfera Labs S.r.l.